Leaf Spring Assembly Research

Shahryar Ali Zafar

Figure 1.1

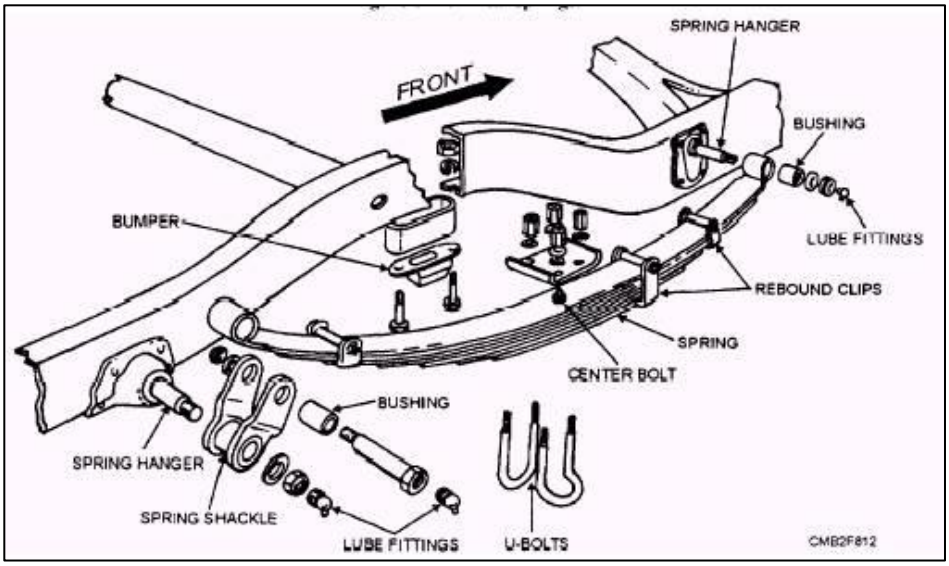

1. Abstract

This research investigates a traditional yet still widely used automobile suspension component: the leaf spring. Commonly used on the rear suspension of trucks, trailers, and off-road vehicles, leaf springs consist of multiple curved steel strips stacked and clamped together, with the ends mounted to the chassis to support axle loads and absorb road impacts.

Unlike modern suspension systems that offer many adjustment options, a leaf spring's behavior is mainly controlled by its geometry and material, so ride stiffness and load response must be achieved through design choices.

In this project, a leaf spring assembly was modeled in SOLIDWORKS and evaluated under a consistent load using SOLIDWORKS Simulation (FEA). Multiple configurations were tested by varying number of leaves, thickness, width, and curvature. Deflection results were used to calculate equivalent stiffness values, which were then analyzed in Python through static force–deflection plots and a simple dynamic mass–spring–damper model. The combined approach shows how key design changes directly affect stiffness and overall suspension response under the same loading conditions.

2. Methods

The first step of this project was to design a leaf spring suspension assembly in SOLIDWORKS. This baseline configuration used five leaves, with the top (main) leaf containing the eye features at both ends for chassis mounting. *Figure 2.1* shows the assembly designed.

Figure 2.1

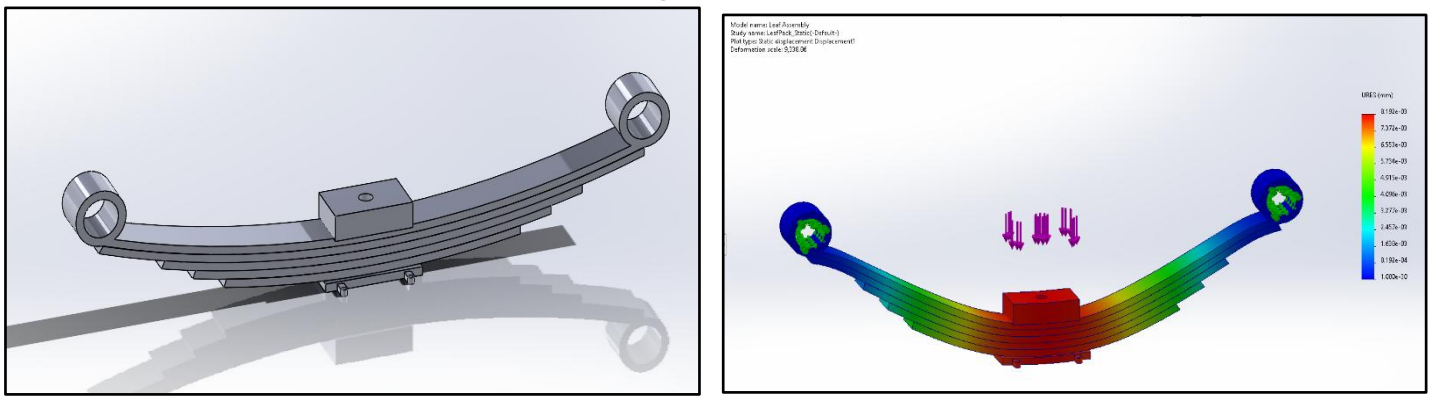

Hardware such as hangers, U-bolts, and clamps was not modeled in detail, since the goal of this work was to compare relative stiffness trends across design changes. To apply load consistently, a top loading block was added at the center of the pack to represent a uniform force transfer region. A bottom support block was also included to provide a stable reference surface and ensure consistent boundary condition. The baseline dimensions of this assembly were treated as the reference configuration for all comparisons.

After the CAD assembly was completed, it was imported into SOLIDWORKS Simulation for Finite Element Analysis (FEA). The assembly was assigned Plain Carbon Steel as the material and contact behavior between adjacent leaves was defined so the pack behaved as a single stacked system under load. The two inner cylindrical faces of the main leaf eye features were constrained using bearing supports, rather than fixed restraints, to better represent the rotational behavior of leaf spring mounting points.

A vertical downward load of 1000 N was applied at the center of the top loading block. The study was then run, and the deformation was reviewed.

Using the static load–deflection relationship, an equivalent stiffness value was calculated for the design as:

$$k = \frac{F}{\delta} \quad (i)$$

where F is the applied force i.e. 1000 N and δ is the measured displacement of the center block. This stiffness value served as the key comparison metric to quantify how much an assembly variant deflected under the same load.

To evaluate how design choices influence stiffness, additional assemblies were created by modifying one parameter at a time while keeping all other baseline dimensions and simulation settings unchanged. This one-factor-at-a-time approach ensured a fair comparison and allowed the influence of each design variable to be isolated. A summary of the modified configurations and their parameter values is provided in *Figure 2.2*.

#	Assembly	# of Leaves	Leaf thickness	Leaf width	Leaf Curve radius	Weight
1	**Baseline**	5	10 mm	50 mm	1200 m	13.69 kg
2	**One less leaf**	**4**	10 mm	50 mm	1200 m	12.25 kg
3	**Thick leaves**	5	**15 mm**	50 mm	1200 m	18.87 kg
4	**Wider leaves**	5	10 mm	**60 mm**	1200 m	16.07 kg
5	**Curved leaves**	5	10 mm	50 mm	**700 mm**	13.41 kg

We finally compared stiffness of each of the suspension assemblies to the weight it adds to the vehicle. Weight is a major engineering constraint in suspension design which is why stiffness improvements must also be evaluated alongside mass.

3. Results

To obtain the stiffness k value for the baseline leaf spring assembly, the applied load and measured deflection from the SOLIDWORKS Simulation study were used with the linear spring relation *(i)*.

A vertical load of $F = 1000$ N was applied at the center of the top block, and the center displacement (δ) was recorded from the deflection plot. Using the baseline deflection value of 0.015550 mm, the baseline stiffness was calculated as $k = 6.4309 \times 10^7$ N/m. This stiffness directly defines the slope of the Force–Displacement line ($F = kx$), which is why the baseline Force–Displacement curve appears linear with a constant gradient. This is shown in *Figure 3.1*.

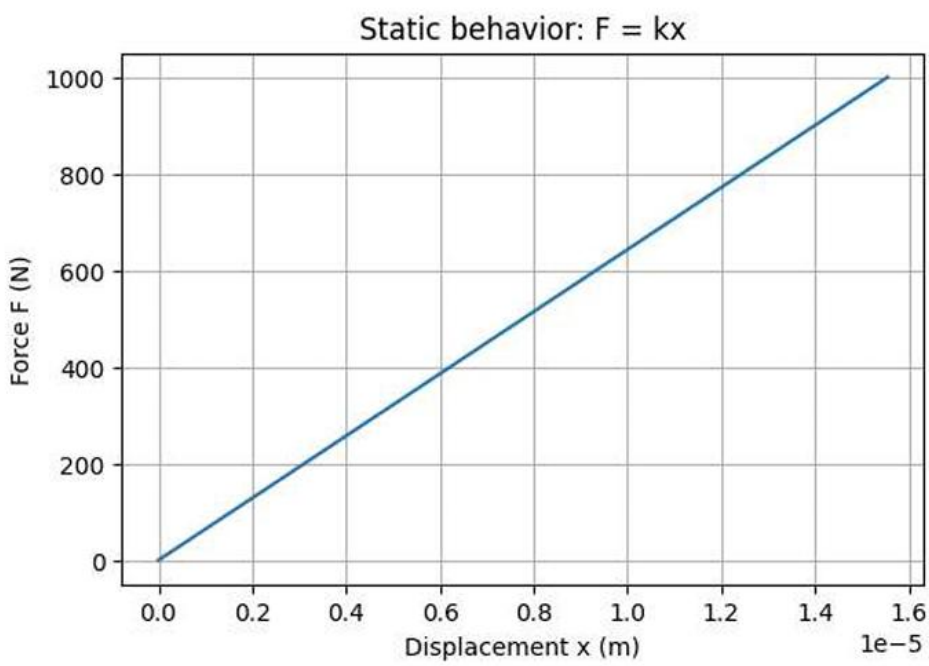

Figure 3.1

Next, the baseline assembly was modeled as a mass–spring–damper system in Python using the equivalent stiffness k, a lumped mass value (used as the modeled "supported mass"), and a 1000 N step input force. The dynamic response was simulated under four damping cases defined by damping ratio ζ:

- Low damping
- Medium damping
- Heavy damping
- Critical damping

From the same parameters, the natural frequency and time period were also computed.

$$\omega_n = \sqrt{\frac{k}{m}}, f_n = \frac{\omega_n}{2\pi}, T_n = \frac{1}{f_n}$$

These formulas give outputs that provide a consistent way to compare how quickly each configuration responds and how much it oscillates before settling. These calculations are shown in the code. Figure 3.2 shows the baseline assembly's time response $x(t)$under the four damping conditions.

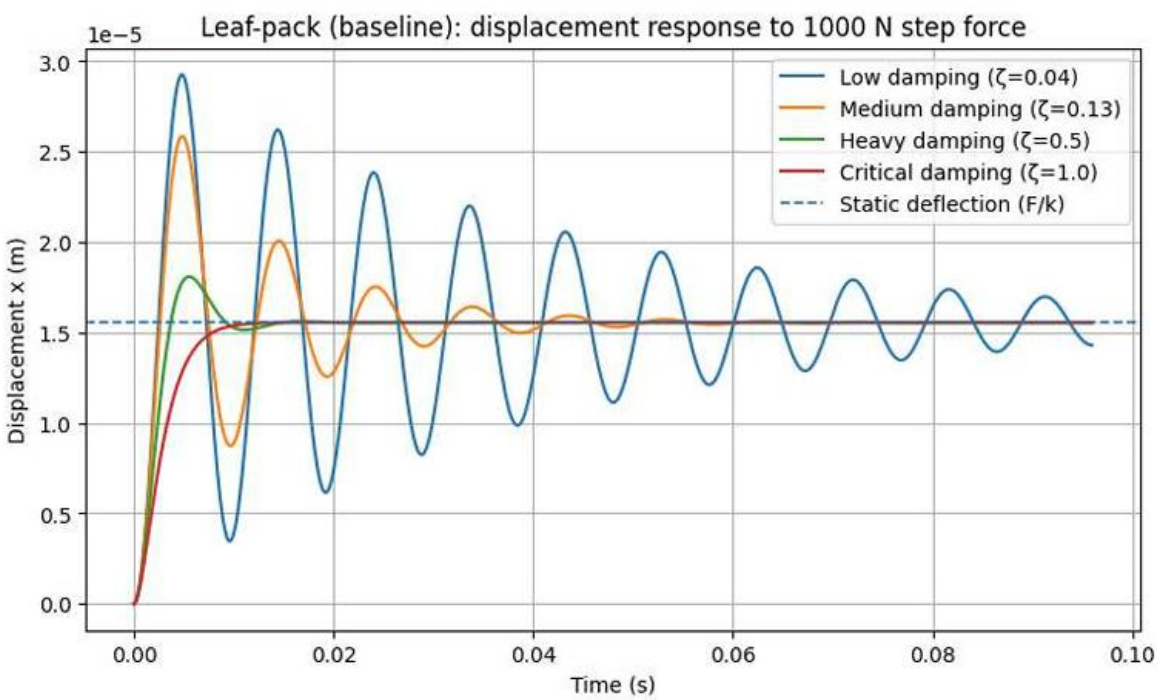

Figure 3.2

The same workflow was then repeated for each modified assembly:

- run FEA under the same 1000 N load,
- record the center deflection δ,
- compute stiffness $k = F/\delta$,
- generate the same dynamic response plots in Python using the updated stiffness value.

All the different assemblies and their plots are shown below.

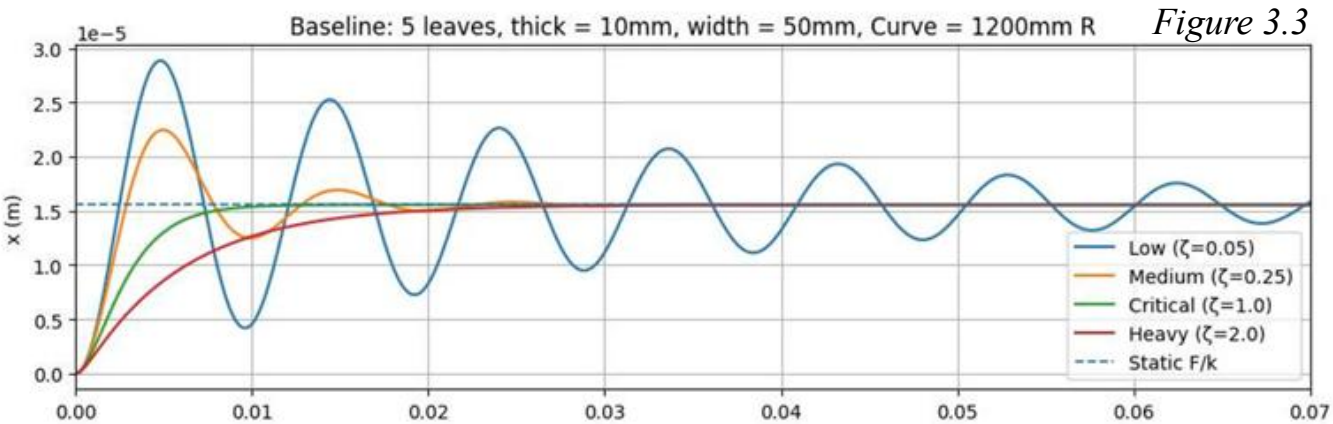

Figure 3.3

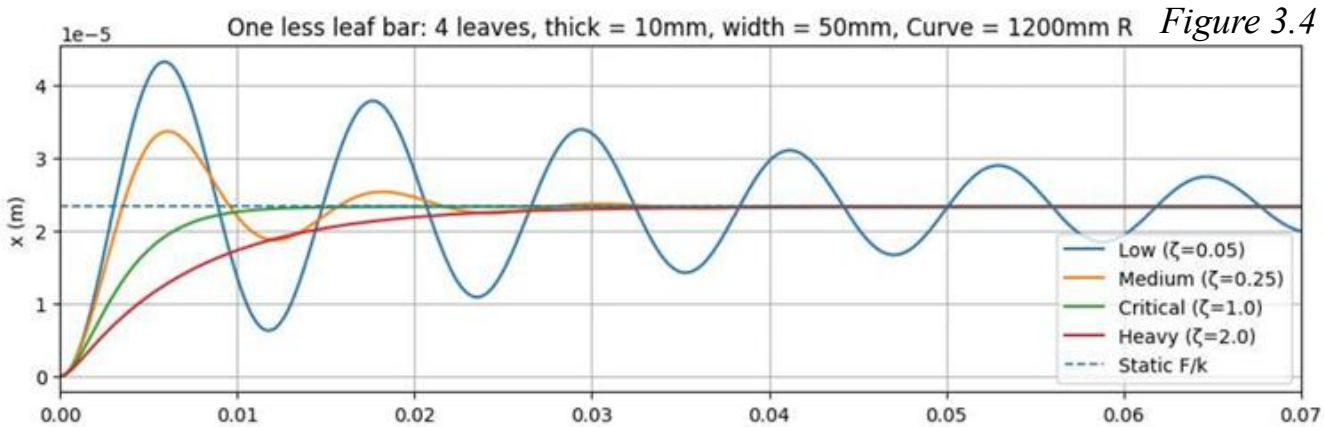

Figure 3.4

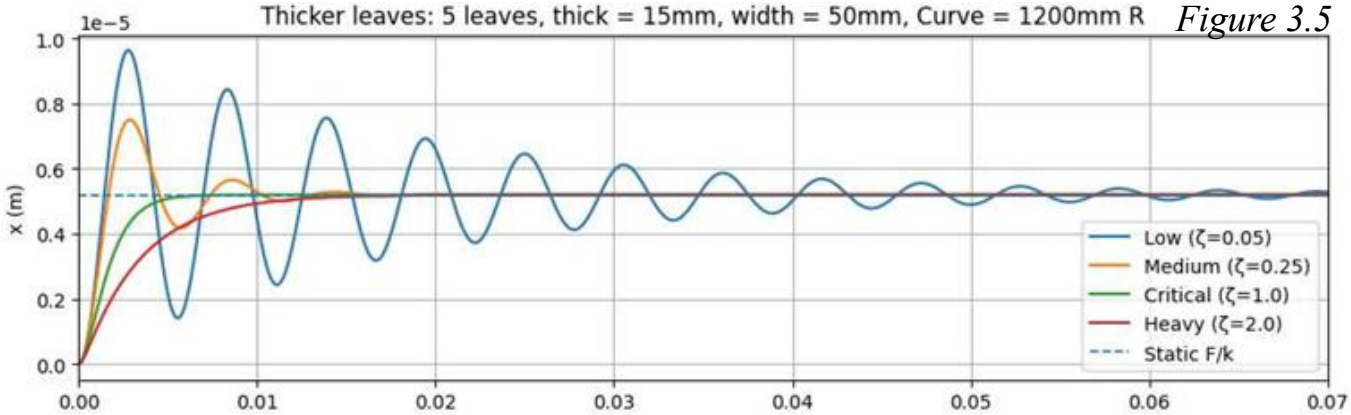

Figure 3.5

Figure 3.6

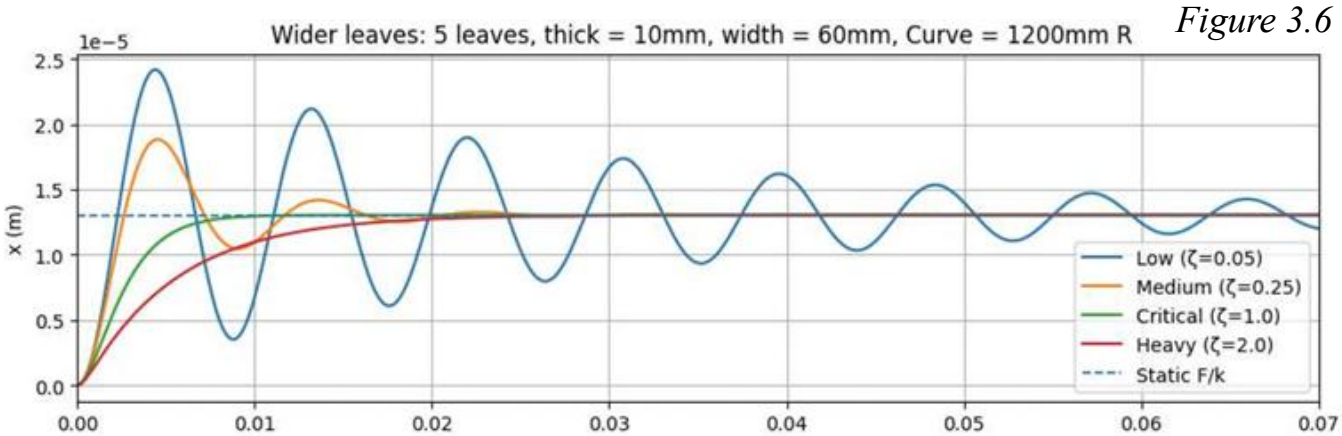

Figure 3.7

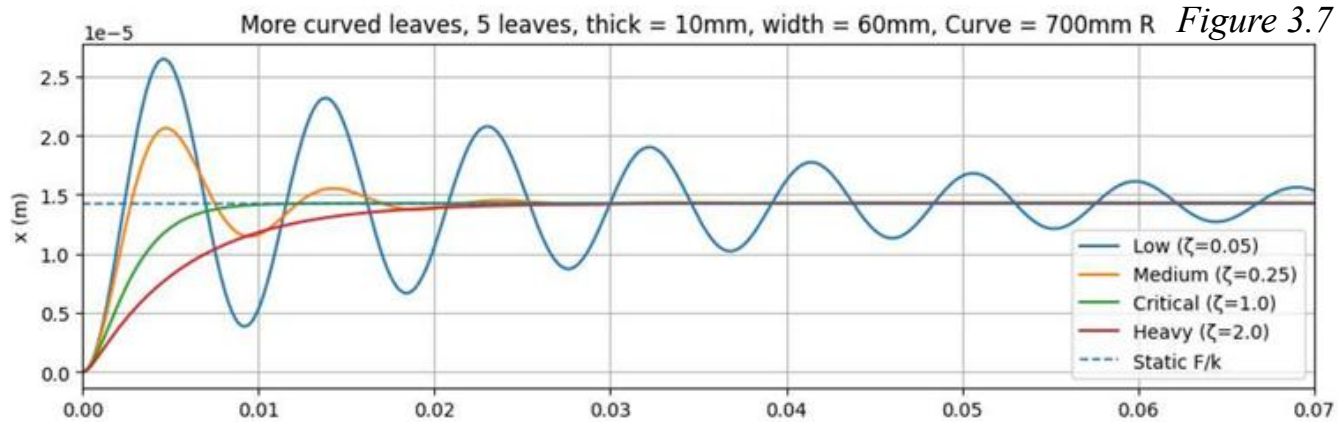

A single combined Force–Displacement plot, *Figure 3.8,* was produced to compare all configurations on one graph. In this comparison, steeper lines correspond to higher stiffness of the suspension, while shallower lines correspond to lower stiffness of the suspension.

Figure 3.8

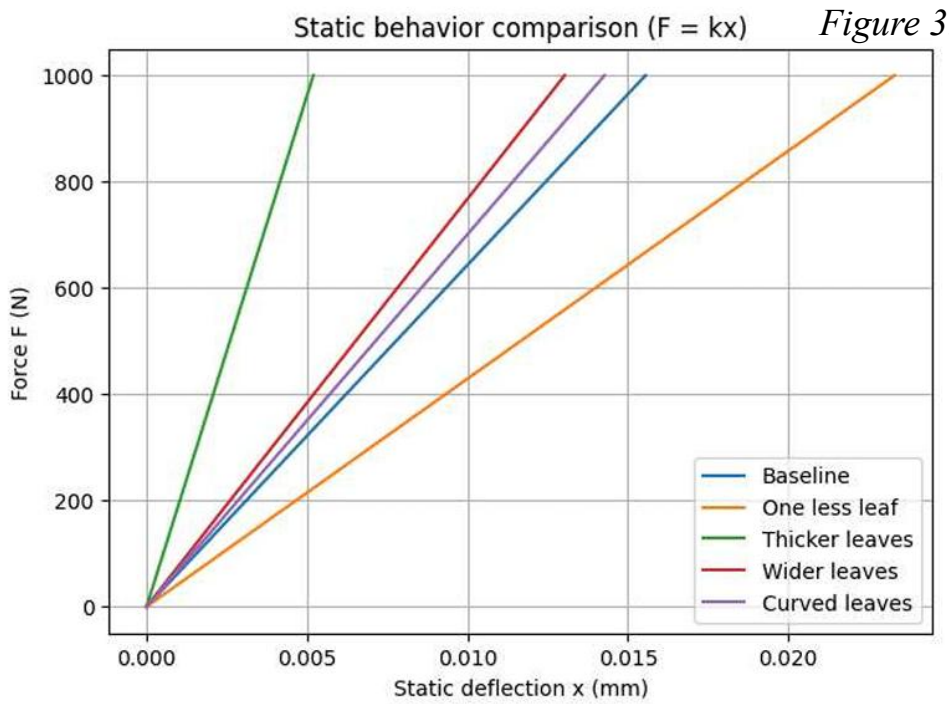

Heading towards the concluding graph of the research we previously discussed that suspension design is not only about stiffness but also about added mass. This is why we added the measured assembly masses in a stiffness–mass comparison. *Figure 3.9* presents a quadrant plot centered on the baseline configuration, dividing designs into lighter/heavier and softer/stiffer relative to the baseline.

This visualization helps identify which modifications improve stiffness efficiently versus which increase stiffness at a large weight cost.

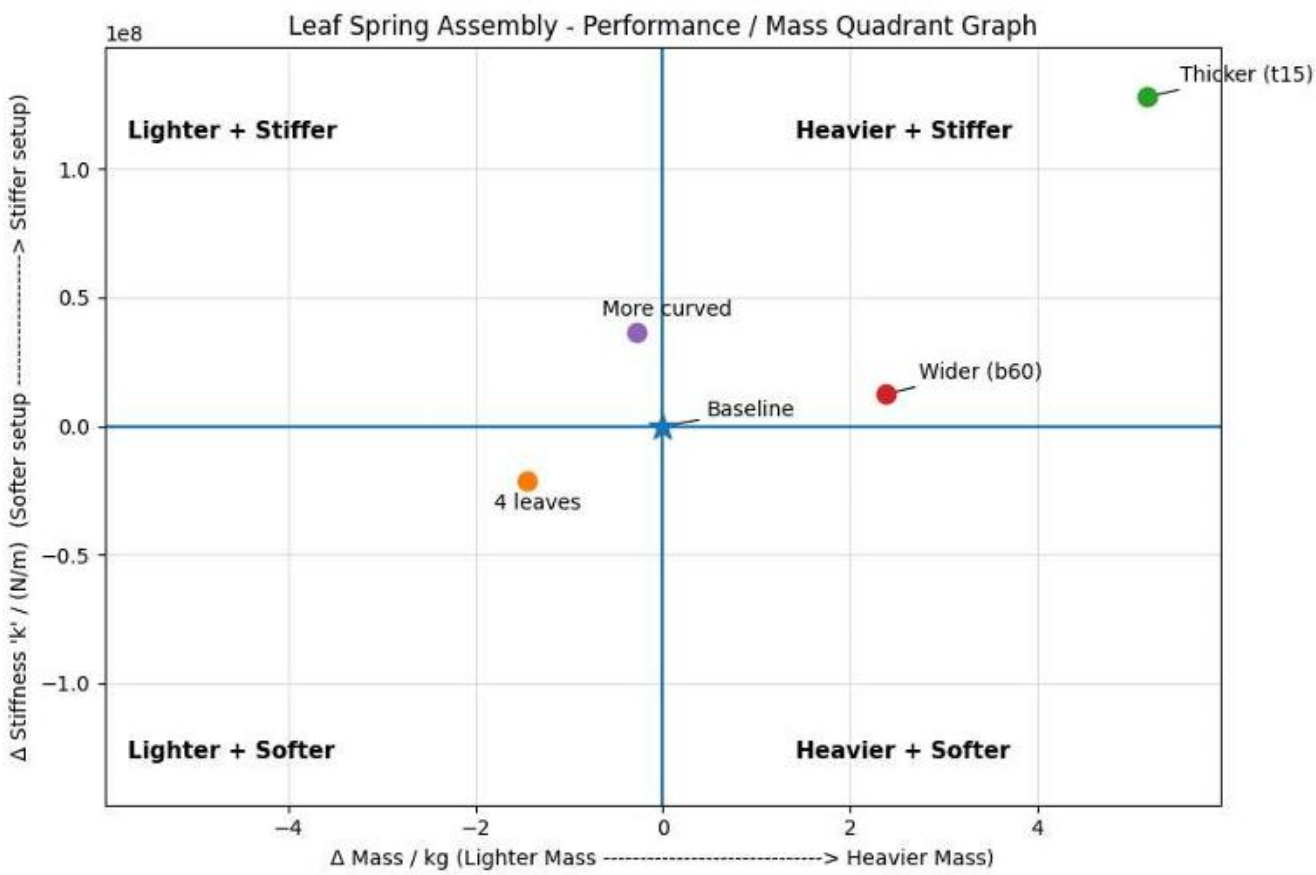

Figure 3.9

4. Discussion

The data collected in this study shows clear differences in how each leaf spring configuration responds under the same 1000 N load, and those differences are captured through the measured deflection values and the stiffness values calculated from them. The deflection results were used to interpret suspension behavior. A design that produced a larger deflection under the same force was treated as a softer setup, while a design that produced a smaller deflection was treated as a stiffer setup. This allowed each configuration to be compared directly using the same loading condition and the same measurement location.

The “one less leaf” configuration produced the greatest deflection and therefore the lowest stiffness. This behavior is expected because reducing the number of leaves reduces the amount of material resisting bending and lowers the effective bending resistance of the pack. With fewer load-carrying members stacked together, the spring assembly flexes more easily under the same load, resulting in a softer response. This kind of adjustment can be useful when compliance is desired, though it may be less suitable when higher load capacity is needed.

The “thicker leaves” configuration produced the smallest deflection and therefore the highest stiffness among the tested designs. Increasing thickness greatly increases bending resistance, so the assembly becomes much harder to flex under the same applied force. The tradeoff is that this change also increases mass significantly, which matters in applications where weight must be controlled for performance, efficiency, or packaging. The results highlight thickness as the strongest stiffness lever in this study, but also the most costly in terms of added weight.

The “wider leaves” configuration showed a moderate reduction in deflection compared to baseline, indicating a moderate stiffness increase. Increasing width increases the cross-sectional area resisting bending and stiffens the leaf pack, but the effect is not as aggressive as increasing thickness. This is also consistent with the outcome as the assembly becomes stiffer than baseline but does not reach the stiffness achieved by the thicker configuration. Its mass increase also sits between

baseline and the thicker setup, making it a more balanced option when some stiffness gain is needed without as large of a weight penalty.

The “more curved” configuration reduced deflection compared to baseline, meaning the assembly behaved stiffer while remaining relatively close to the baseline in mass. In this case, changing curvature alters how the spring engages under load and how bending develops along the leaf length, which can increase the effective stiffness measured at the center for the same loading setup. From a tradeoff perspective, this modification is important because it improves stiffness without a large increase in weight, making it one of the more mass-efficient paths to a stiffer suspension in the tested set.

When stiffness is considered alongside mass, the results show that improvements are not equally efficient. The stiffness–mass comparison centered on the baseline makes it clear that some changes push the design toward stiffer behavior at a substantial weight cost, while others provide stiffness gains with minimal added mass.

Based on the tested configurations, the thicker-leaf design is the best choice if maximum stiffness is the priority and added weight is acceptable. However, if the goal is improved stiffness while staying close to the original mass, the more-curved configuration offers the strongest overall compromise because it achieves a stiffness increase without the significant weight penalty seen in the thicker setup.

The dynamic simulations reinforce these trends by translating the FEA-derived stiffness values into time-response behavior. Using the same assumed lumped mass, a consistent step force input, and multiple damping ratios, stiffer designs settle at smaller static displacement and exhibit faster oscillation behavior, while softer designs settle at larger displacement and respond more slowly. The damping cases mainly control overshoot and how quickly oscillations decay, but the stiffness values extracted from FEA are what shift the overall response between configurations. Together, the static deflection results and the dynamic plots provide a clear comparison framework for how leaf spring design changes affect suspension behavior under consistent loading assumptions.

5. Limitations

The main limitation of this study is that the leaf pack was not modeled with fully realistic inter-leaf contact. The leaves were stacked and positioned using mates, but mates do not represent the frictional sliding and local separation that occur in real leaf springs. Because the leaves were effectively “resting/mated” rather than interacting through true friction contact, the predicted deflections and stiffness values may differ from real behavior, especially as load increases.

Another limitation is that the full mounting and clamping hardware was simplified. Real leaf spring performance is influenced by components such as clamps, U-bolts, axle seats, and shackles, which affect load distribution and constraint conditions. The study focused on consistent comparisons between configurations rather than reproducing an exact installed suspension system.

Finally, both the FEA and the Python dynamics model use simplifying assumptions. The FEA results are based on a single static 1000 N load and linear material behavior, while real suspensions experience dynamic, repeated loading. The Python mass–spring–damper simulation is also an idealized representation intended to compare trends, not to predict complete vehicle ride behavior.

6. Conclusion

This study showed how key leaf spring design parameters change suspension stiffness under a consistent 1000 N load. A baseline five-leaf assembly was modeled in SOLIDWORKS, analyzed using FEA to measure deflection, and converted into equivalent stiffness values that were then compared in Python using static force–deflection plots and a simplified mass–spring–damper response. The results indicated that removing a leaf increases deflection and produces a softer suspension, while increasing thickness creates the stiffest configuration but adds significant weight. Increasing width produced a moderate stiffness gain and increasing curvature improved stiffness with relatively low mass increase. Overall, the workflow provides a repeatable way to compare designs and emphasizes that the best configuration depends on balancing stiffness targets with mass constraints.